DWG NO. 6836

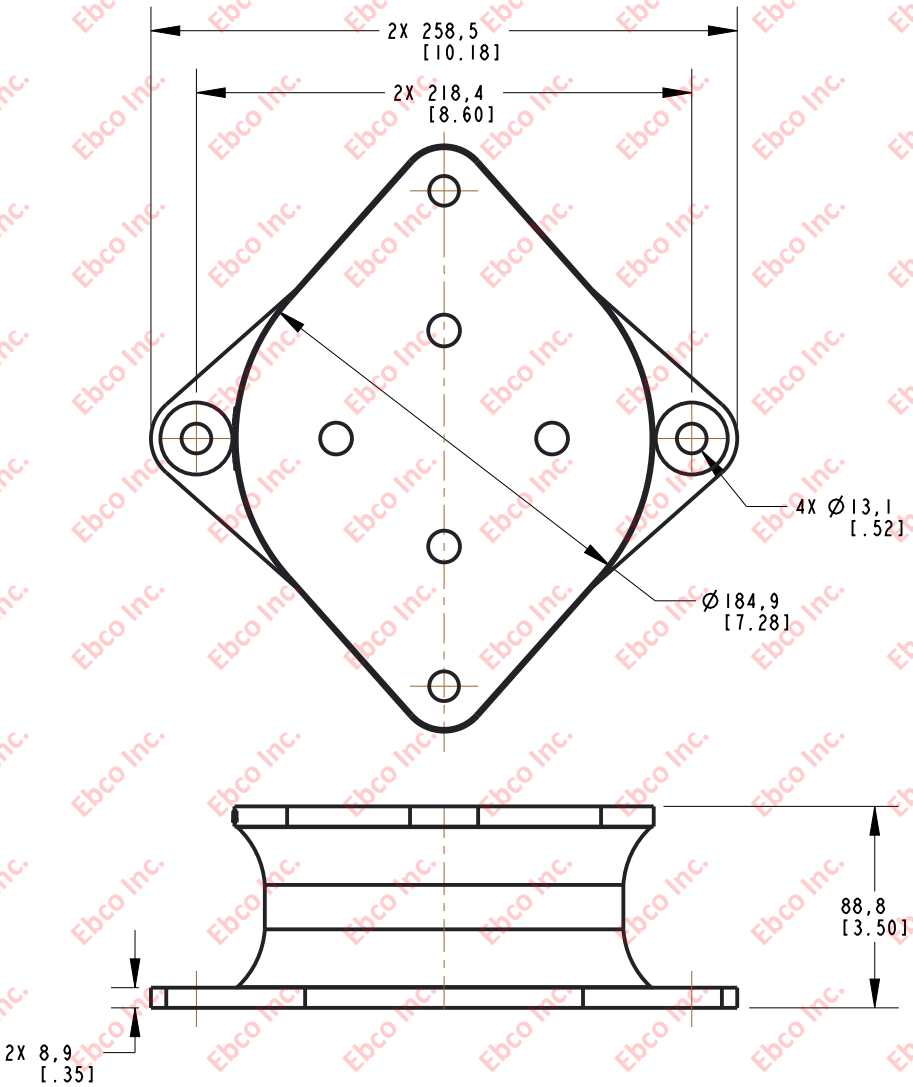

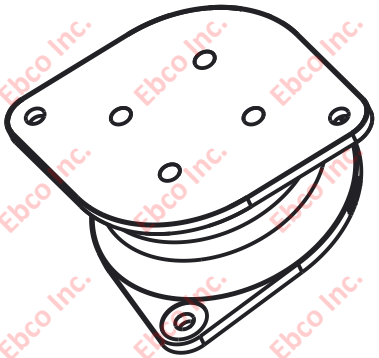

SPECIFICATIONS

PART NUMBER	MAX. RECOMMENDED LOAD	RADIAL STIFFNESS
NATURAL RUBBER	LBS	LBS/IN
6836-73	750	1300
6836-74	950	1600
6836-75	1100	1900

Ebco

TITLE: 6836

TOLERANCES PER RMA STANDARD A3

REV. B

DATE: 06-11-21

UNITS: mm [INCH]

1330 HOLMES RD. ELGIN, IL 60123

SPECIFICATIONS SUBJECT TO CHANGE