DWG NO. 5314

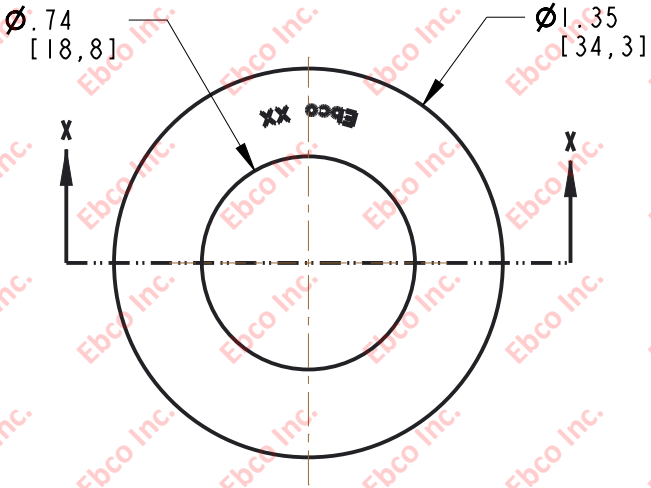

INSTALLATION VIEW (Shown under no load)

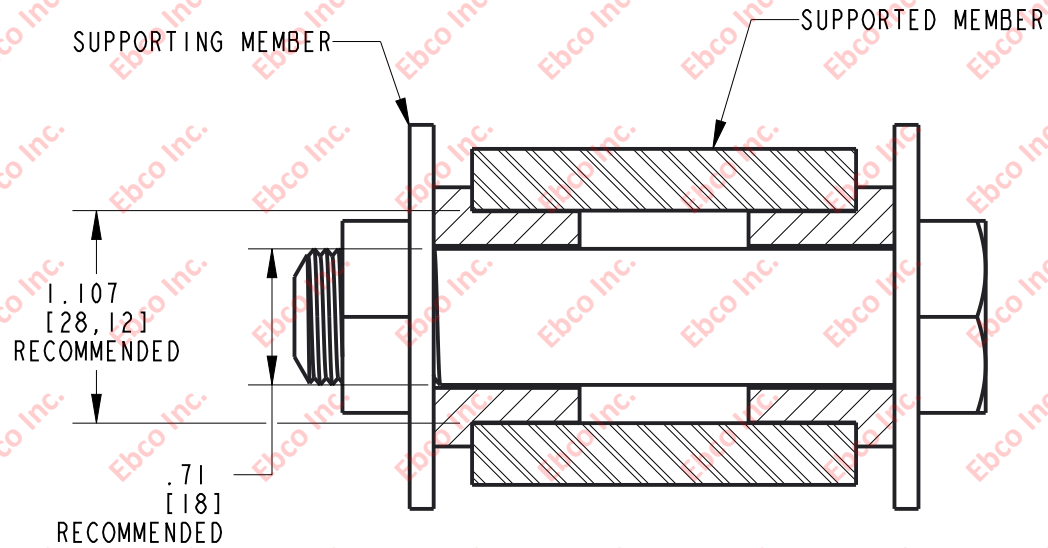

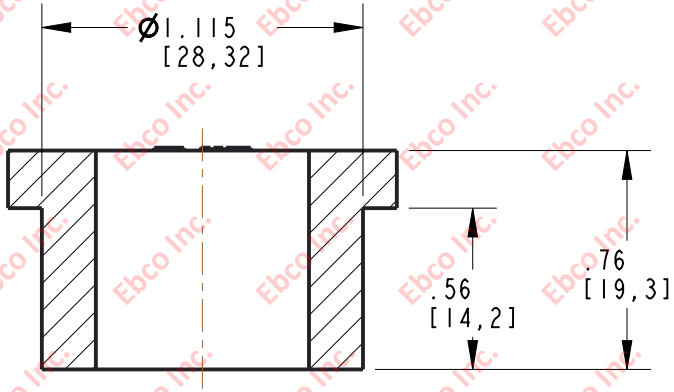

SECTION X-X

*AVAILABLE IN A VARIETY OF MATERIALS AND STIFFNESS

TITLE:	5314
	THE INFORMATION CONTAINED IN THIS DRAWING IS THE SOLE PROPERTY OF EBCO ANY REPRODUCTION IN PART OR AS A WHOLE WITHOUT THE WRITEN PERMISSION OF EBCO IS PROHIBITED.
TOLERANCES PER RMA STANDARD A3	REV. A / DATE: 10-01-20 / UNITS INCH [MM]
Ebco	1330 HOLMES RD. ELGIN, IL 60123
	SPECIFICATIONS SUBJECT TO CHANGE