DWG NO. 4930

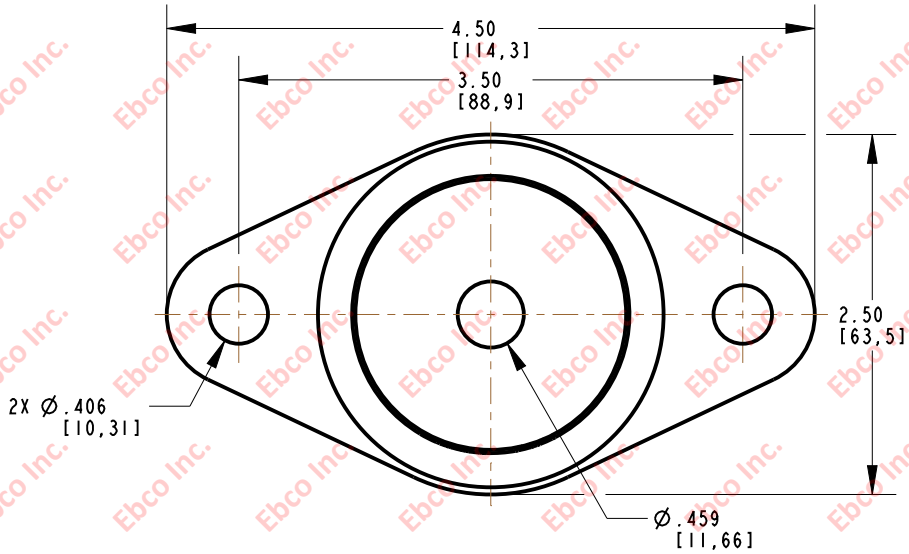

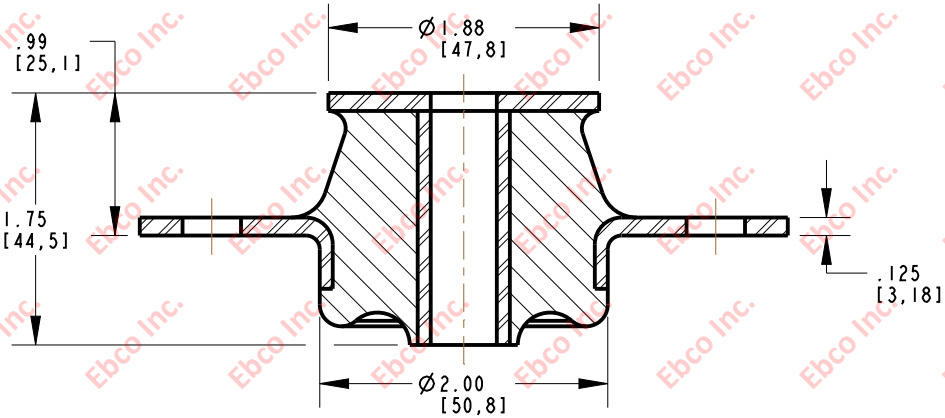

INSTALLATION VIEW (Shown under no load)

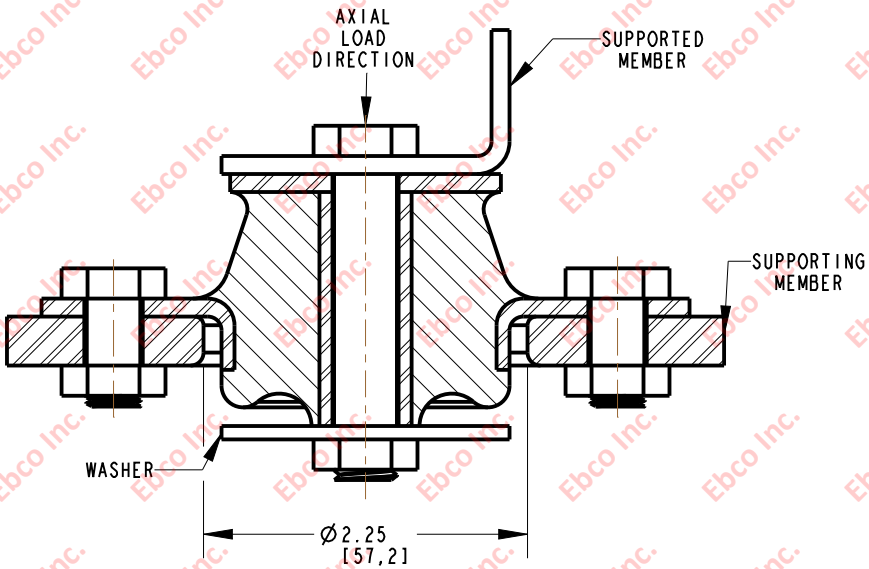

SPECIFICATIONS

PART NUMBER		MAX. AXIAL DEFLECTION		MAX. AXIAL LOAD	
NATURAL RUBBER	NEOPRENE	in	mm	lb	N
4930-71	4930-81	0.15	3.81	140	623
4930-72	4930-82			175	779
4930-73	4930-83			225	1001
4930-74	4930-84			260	1157
4930-75	4930-85			310	1379
4930-77	4930-87			400	1780
4930-78	4930-88			600	2669

INSTALLATION DIMENSIONS

RECOMMENDED BOLT INFORMATION				TIGHTENING TORQUE			
ENGLISH		METRIC		CLAMP LOAD		TIGHTENING TORQUE	
SIZE	GRADE	SIZE	CLASS	lb	N	ft-lb	N-m
7/16	5	M10	9.8	6777	30146	49.40	66.90

WASHER SPECIFICATIONS

O.D.		I.D.		THICKNESS	
in	mm	in	mm	in	mm
2.00	50.80	0.45	11.43	.125	3.18

TITLE: 4930

THE INFORMATION CONTAINED IN THIS DRAWING IS THE SOLE PROPERTY OF EBCO ANY REPRODUCTION IN PART OR AS A WHOLE WITHOUT THE WRITEN PERMISSION OF EBCO IS PROHIBITED.

TOLERANCES PER RMA STANDARD A3 | REV. C | DATE: 08-26-13 | UNITS INCH [MM]

Ebco
1330 HOLMES RD. ELGIN, IL 60123

SPECIFICATIONS SUBJECT TO CHANGE

Ebco Inc.