DWG NO. 4652

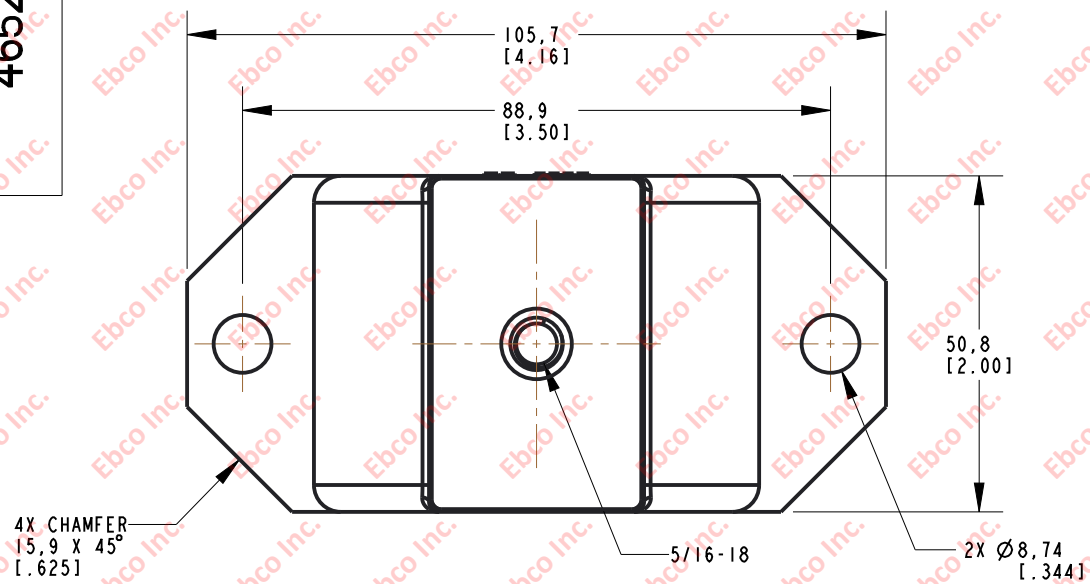

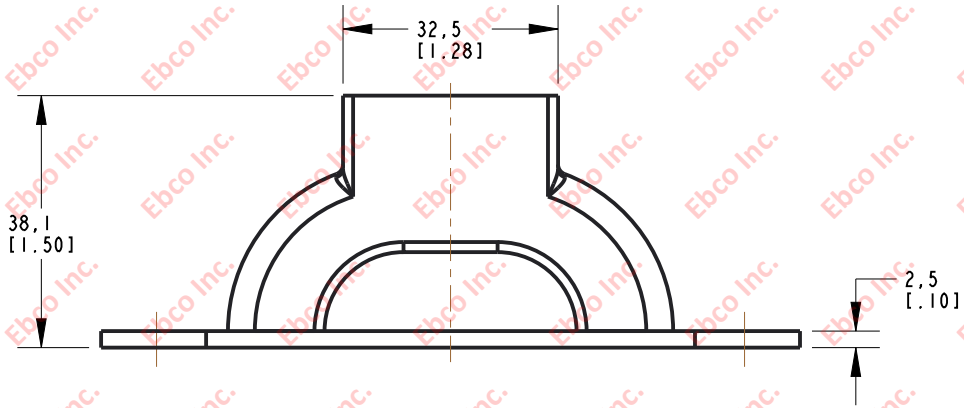

INSTALLATION VIEW (Shown under no load)

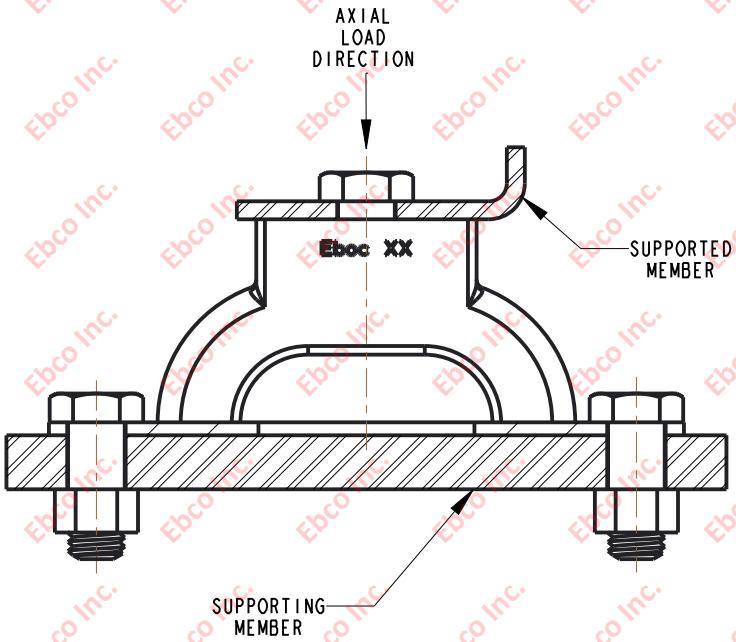

SPECIFICATIONS

PART NUMBER		MAX. AXIAL DEFLECTION		MAX. AXIAL LOAD	
NATURAL RUBBER	NEOPRENE	in	mm	lb	N
4652-70	4652-80	0.20	5,08	45	200
4652-72	4652-82			60	267
4652-73	4652-83			70	311
4652-74	4652-84			85	378

Ebco

TITLE: 4652

TOLERANCES PER RMA STANDARD A3

REV. C

DATE: 06-07-21

UNITS: mm [INCH]

1330 HOLMES RD. ELGIN, IL 60123

SPECIFICATIONS SUBJECT TO CHANGE