1103

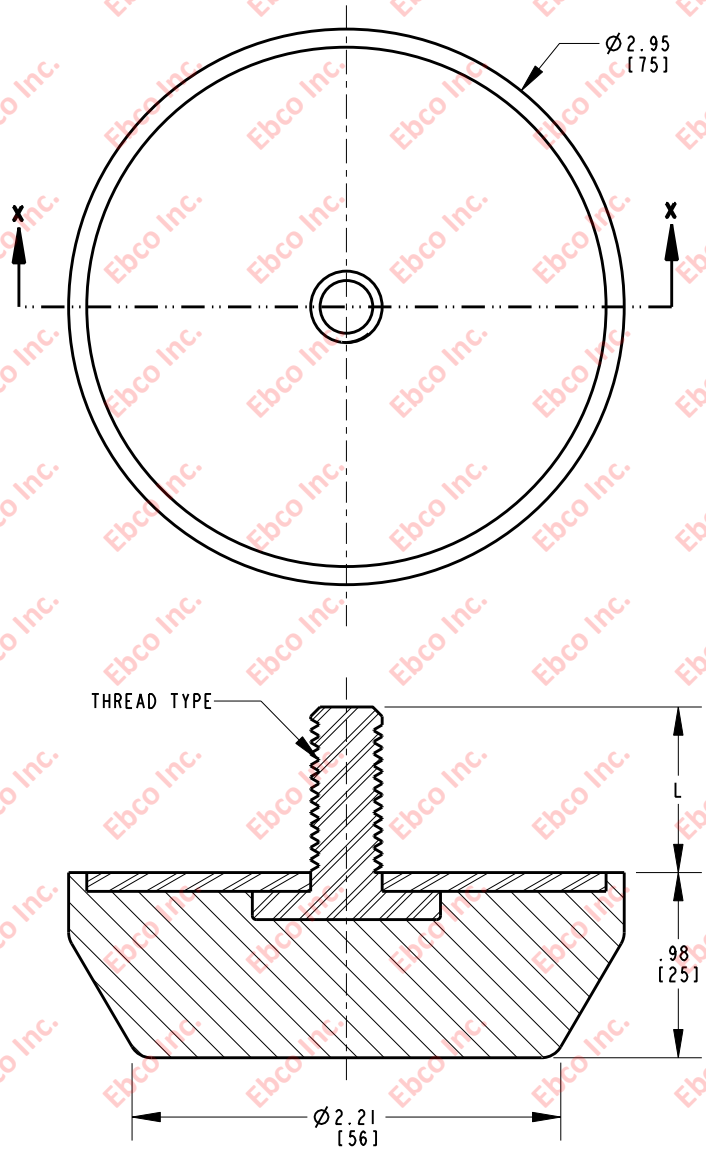

HARDWARE SPECIFICATIONS

PART NO.	THREAD TYPE	L
1103-XX-H7	3/8-16	.88 [22,4]

AXIAL COMPRESSION SPECIFICATIONS

PART NUMBER		MAX. RECOMMENDED STATIC LOAD		REFERENCE STIFFNESS	
NATURAL RUBBER	NEOPRENE	lb	N	lb/in	N/mm
1103-73-XX	1103-83-XX	325	1446	3250	569
1103-74-XX	1103-84-XX	375	1668	3750	656
1103-75-XX	1103-85-XX	425	1890	4250	744

TITLE: 1103

THE INFORMATION CONTAINED IN THIS DRAWING IS THE SOLE PROPERTY OF EBCO ANY REPRODUCTION IN PART OR AS A WHOLE WITHOUT THE WRITEN PERMISSION OF EBCO IS PROHIBITED.

TOLERANCES PER RMA STANDARD A3

REV. A

DATE: 06-18-12

UNITS INCH [MM]

1330 HOLMES RD. ELGIN, IL 60123